How does a function machine handle $+$, $-$, $\times$, $\div$, and $\circ$?

Quick Check

Find the points of intersection on the graphs of the following functions.

$f(x) = 3x^3 - x^2 - 10x$ and $g(x) = -x^2 + 2x$

Creating + Graphing new functions with transformations ($c > 0$)

Original graph:	$y = f(x)$	$f(x) = x^2$
Horizontal shift c units to the right:	$y = f(x - c)$	
Horizontal shift c units to the left:	$y = f(x + c)$	
Vertical shift c units downward:	$y = f(x) - c$	
Vertical shift c units upward:	$y = f(x) + c$	
Reflection ($x - axis$):	$y = -f(x)$	
Reflection ($y - axis$):	$y = f(-x)$	
Reflection ($origin$):	$y = -f(-x)$	

Visualize each transformation using Desmos Calculator. Draw them out in your notebook and label them.

Sketch the graph of the function (not by plotting points but by starting with the graph of a standard function and applying transformations.)

1. $f(x) = x^2 + 1$
2. $g(x) = \sqrt{x} + 1$
3. $h(x) = |x| + 1$
4. $f(x) = (x - 5)^2$
5. $g(x) = (x + 1)^2$
6. $h(t) = -t^3$
7. $f(t) = \sqrt[4]{-t}$
8. $p(m) = (m - 3)^2 + 5$
9. $q(r) = |r + 2| + 2$
10. $f(x) = \dfrac{1}{x - 4}$
11. $g(x) = |x^2 + 2|$

$+$, $-$, $\times$, and $\div$ of functions

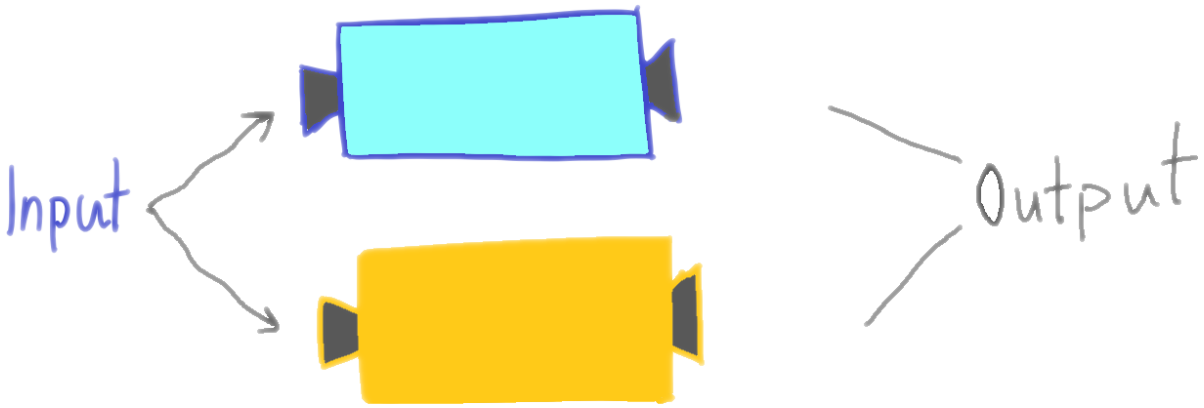

Combining Functions

Let f and g be functions with domains A and B.

$(f+g)(x) = f(x) + g(x)$	Domain $A \cap B$
$(f-g)(x) = f(x) - g(x)$	Domain $A \cap B$
$(fg)(x) = f(x)g(x)$	Domain $A \cap B$
$\left(\frac{f}{g}\right)(x) = \frac{f(x)}{g(x)}$	Domain $\{x \in A \cap B \mid g(x) \neq 0\}$

Combine the given functions

1. Given $f(x) = \sqrt{x-1}$ and $g(x) = \sqrt{4-x}$, find

   a. $(f+g)(x)$

   b. $(f-g)(x)$

   c. $(fg)(x)$

   d. $\left(\frac{f}{g}\right)(x)$

   e. Indicate the domain of the new functions (a-d).

What does it mean to compose $(f \circ g)$ functions?

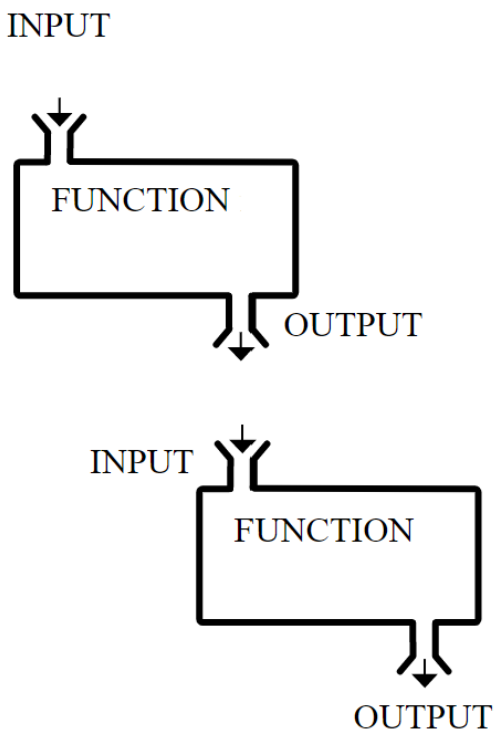

Composition of f and g

$$(f \circ g) = f(g(x))$$

Find $(f \circ g)$ and think about its domain.

$$f(x) = \frac{1}{x-2} \text{ and } g(x) = \sqrt{x+3}$$

Evaluate the composite function

1. $f(x) = x^2 - 6$ and $g(x) = 5 - x^2$

   Evaluate:

   a. $f\big(g(1)\big)$

   b. $g\big(f(3)\big)$

   c. $f\big(f(0)\big)$

   d. $g\big(g(-4)\big)$

2. $f(x) = \sqrt{x}$ and $g(x) = \sqrt{2 - x}$

   Find:

   a. $f \circ g$

   b. $g \circ f$

   c. $f \circ f$

   d. $g \circ g$

What's the error? Explain and show the correction(s).

a.

$$\frac{f(x)}{g(x)} = \frac{x+4}{x^2-16}$$
$$= \frac{x+4}{(x+4)(x-4)} = \frac{1}{x-4}$$

Domain: $(-\infty, 4) \cup (4, \infty)$

b.

$$(f \circ g) = f(x)g(x)$$
$$= (x+4)(x^2-16)$$
$$= (x^3+4x^2-16x-64)$$

Domain: $(-\infty, \infty)$